Bow Stand

COMPULOCKS

SKU	Weight	Date	Version
505B(Black) 505W(White)	1.04 lb	06.05.24	REV E

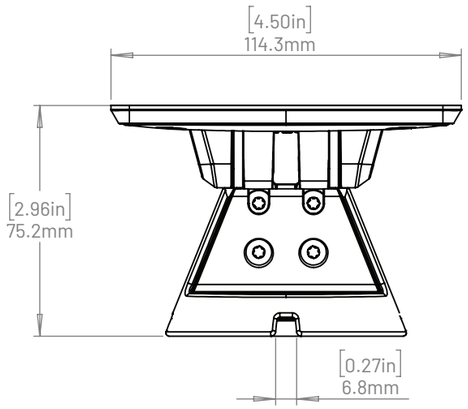

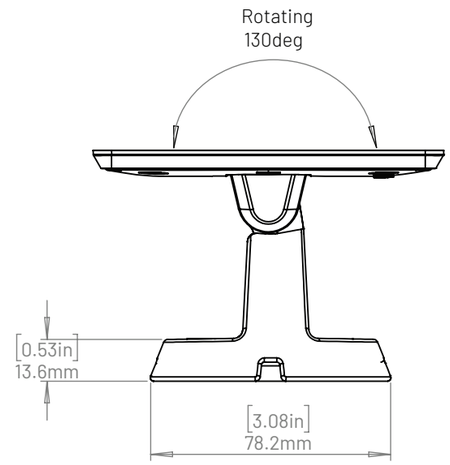

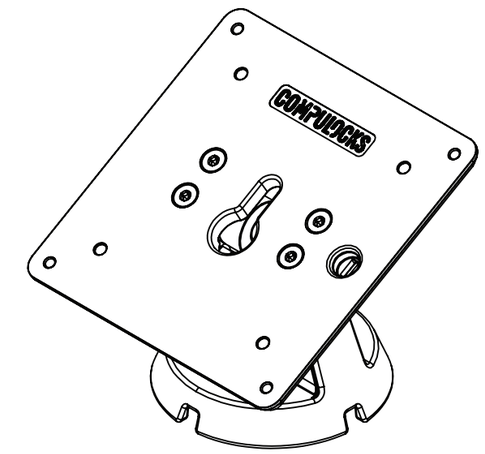

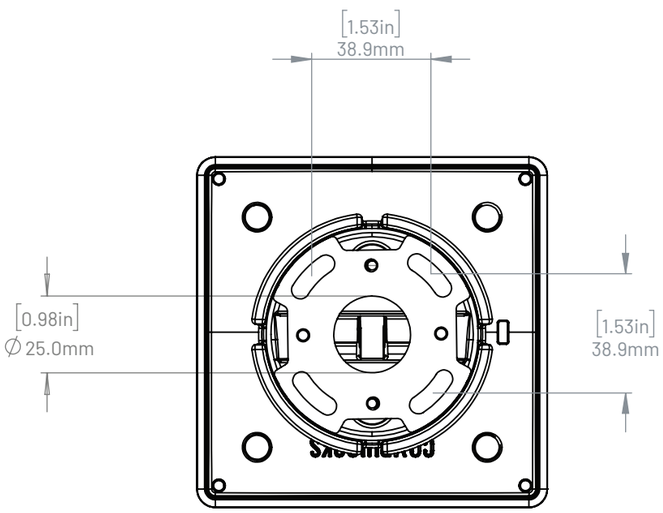

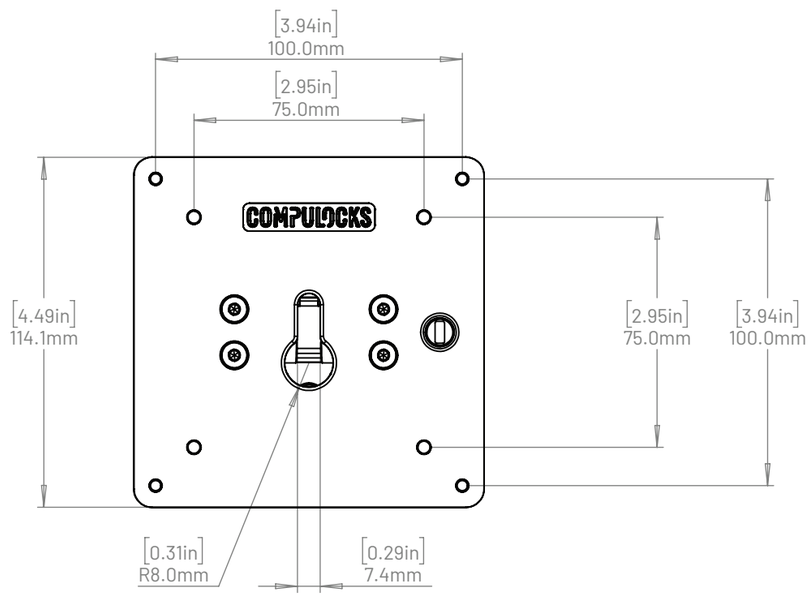

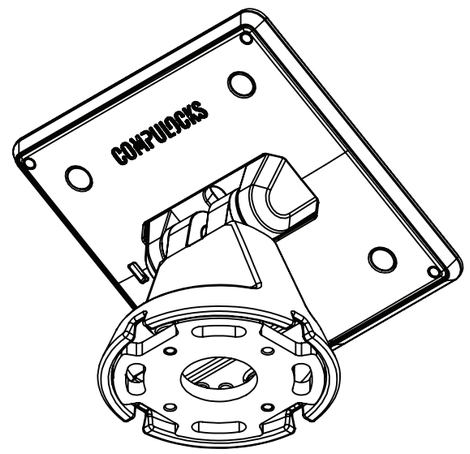

©Compulocks Brands Inc. All Rights Reserved.