Rise Pole Stand 10, 20 SKU: TCDP04, TCDP04W, TCDP01, TCDP01W

Assembly Instructions

compulocks

Installation On Counter Top

1

COUNTER MOUNTING PATTERN

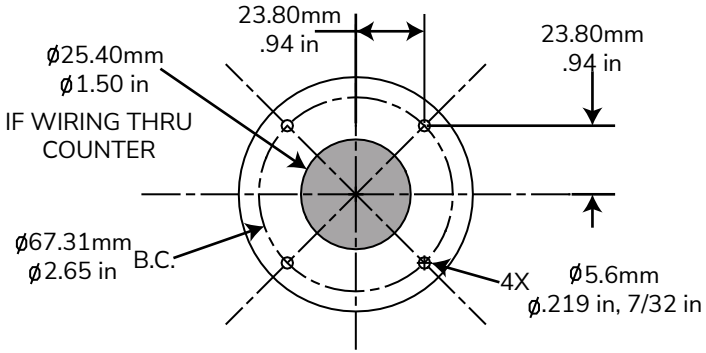

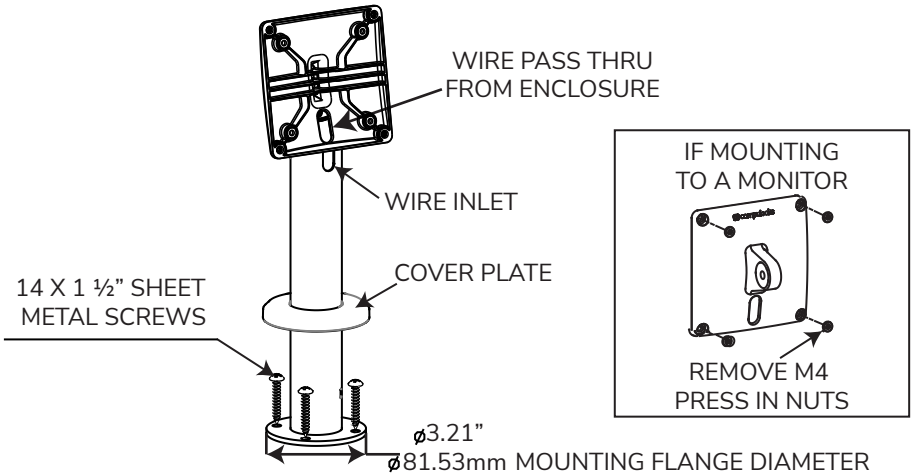

2

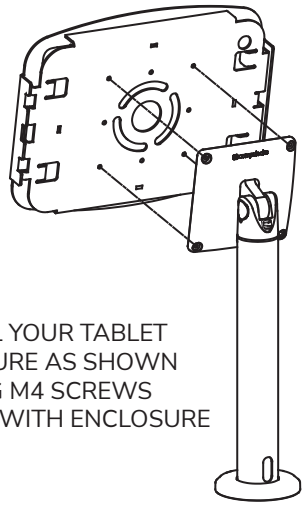

INSTALL YOUR TABLET
ENCLOSURE AS SHOWN
USING M4 SCREWS
PROVIDED WITH ENCLOSURE

3

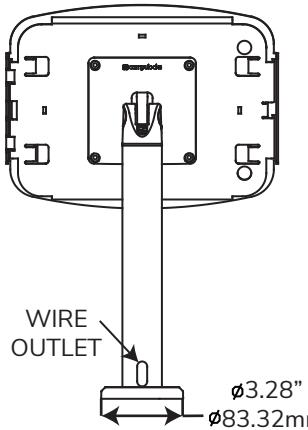

4

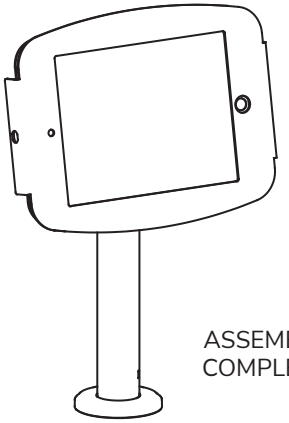

ASSEMBLY
COMPLETE

IN THE BOX

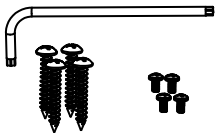

Hardware Kit

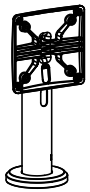

Fixed Pole Stand

ACCESSORIES

Adhesive Base

Single Add On Bracket

Free Standing Base

©Compulocks Brands Inc. All Rights Reserved.

Installation Below Counter

BOTTOM VIEW OF COUNTER

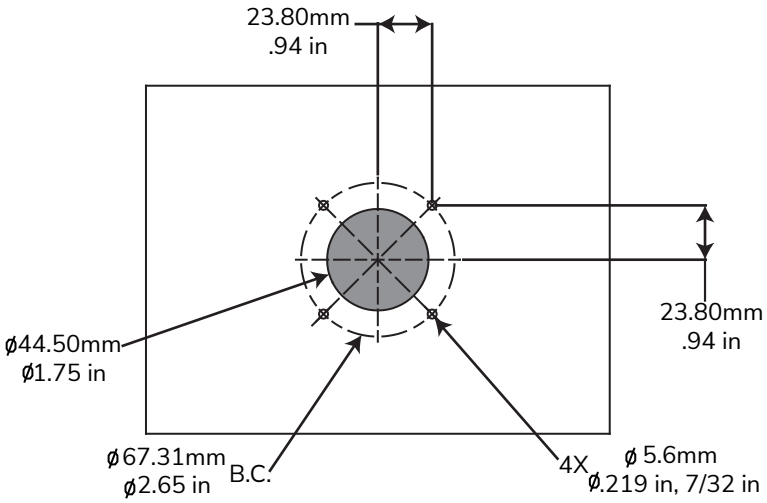

1

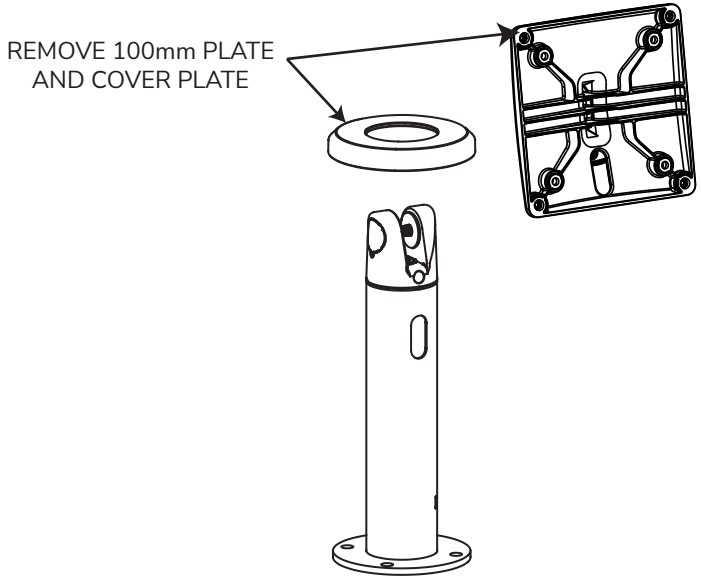

2

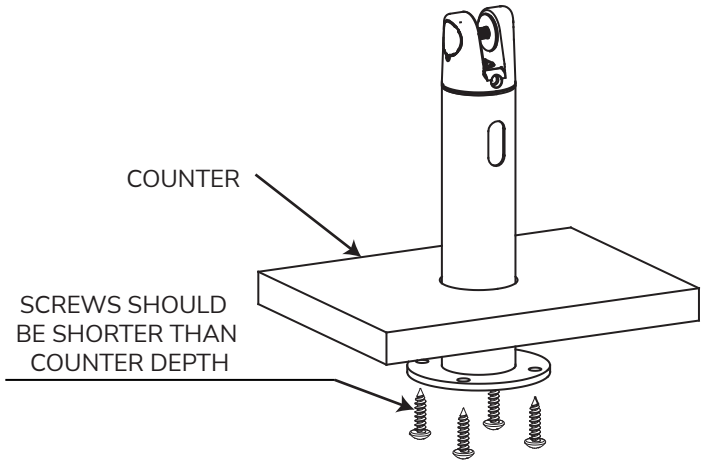

3

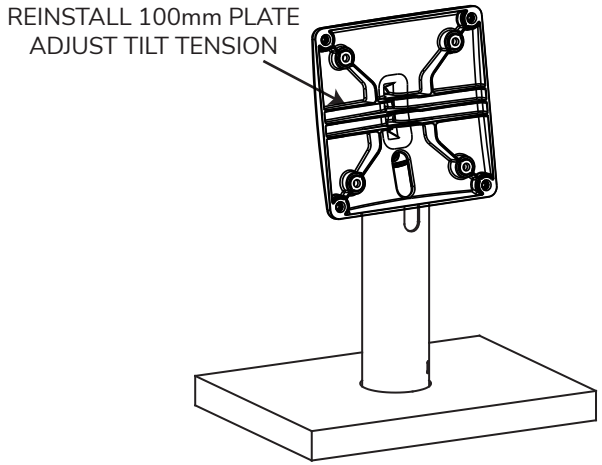

©Compulocks Brands Inc. All Rights Reserved.

Magnetix Mount SKU:VHBMM01

Assembly Instructions

compulocks

1

2

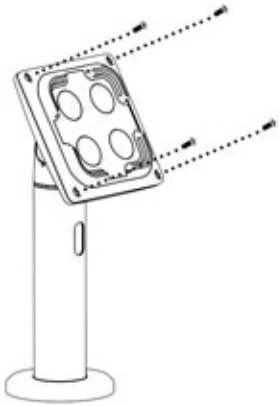

VESA 100*100

X 4

3

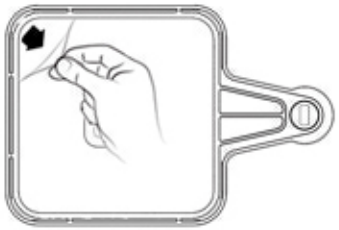

4

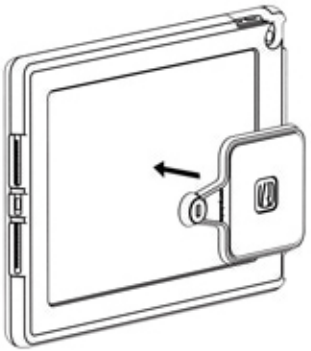

5

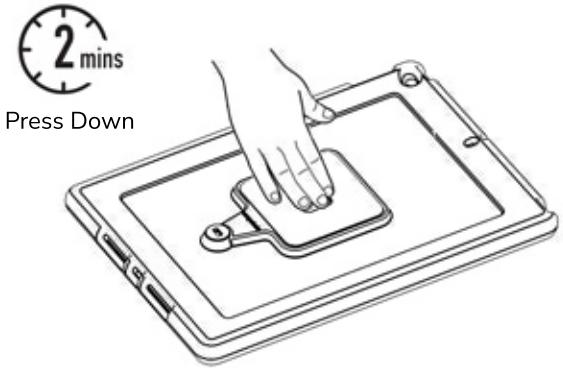

6

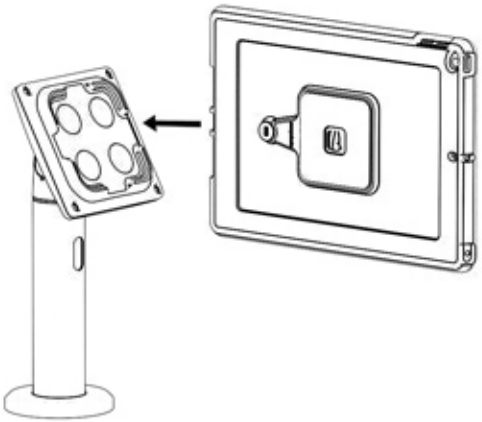

Fits Vesa 100*100 Mount Stands

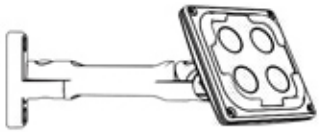

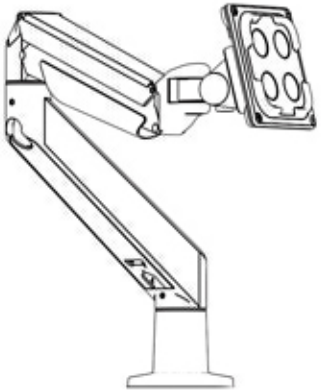

©Compulocks Brands Inc. All Rights Reserved.j